NOTICE

This drawing contains information and data which is proprietary to Aero Consulting Services Ltd. This drawing, or any portion thereof, may not be reproduced, copied, or duplicated in any manner, nor used for manufacturing, without the written permission of Aero Consulting Services Ltd.

By accepting this drawing for reference, the recipient agrees to hold Aero Consulting Services Ltd. harmless from any liabilities arising from the use or misuse of this drawing or the information contained thereon.

Record of Revisions

REV.	Date	Description of changes	by	approved
N/C	08 JAN 99	INITIAL RELEASE	TM	T MARTIN
A	09 OCT 03	DCN B80704NC1 INCPD DCN B80704NC2 INCPD	TM	

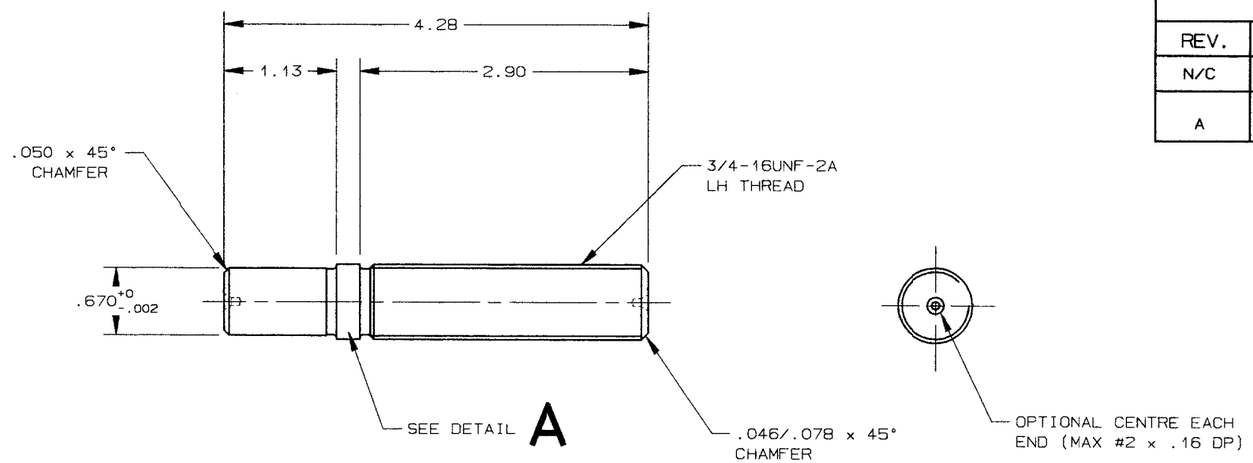

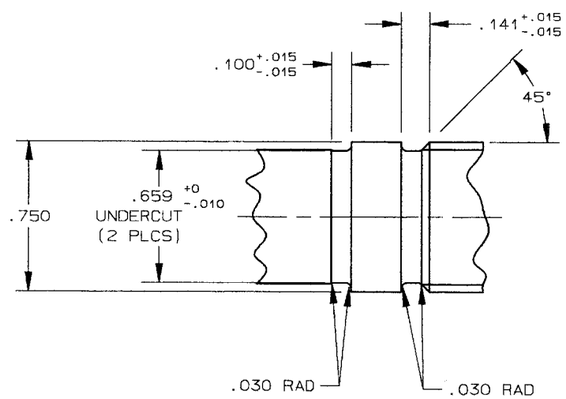

DETAIL A
SCALE 2:1

NOTES:

1. MACHINE ALL OVER.
2. REMOVE ALL BURRS AND SHARP EDGES.
3. THREADS TO BE MANUFACTURED PER MIL-S-7742.
4. SURFACE FINISH TO BE 64 MICRO-INCH OR BETTER.
5. MAGNETIC PARTICLE INSPECT PER ASTM-E-1444.
6. CADMIUM PLATE PER QQ-P-416 CLASS 3, TYPE II.
7. THIS PART SUPERSEDES A85802-7.
8. MATERIAL: 4130 STEEL BAR TO AMS6348 OR MIL-S-6758 (NORMALIZED).

RELEASED FOR ☑ PROD ☐ PROTO ☐ INFO
OCT 14 2003
AERO CONSULTING SERVICES LTD.

PART NO.	DESCRIPTION	MATERIAL
-1	STUD	SEE NOTE 8

QUANTITY PER | LIST OF MATERIALS

B80701
NEXT ASSY
DWG SIZE: C

UNLESS OTHERWISE SPECIFIED
dimensions are in inches
Tolerances on:
Decimals: .XXX ±.010, .XX ±.03, .X ±.1
Angles: ±1/2°

APPROVALS	DATE
DRAWN: T MARTIN	14JAN98
CHECKED:	
PROJECT ENGINEER:	
STRESS:	
AVIONICS:	

NORTHERN AERO INDUSTRIES
1845 ST. MATTHEWS AVENUE
WINNIPEG, MANITOBA R3H 0A8

DETAIL - STUD, MALE, 3/4, ENGINE MOUNT

CODE IDENT NO. 36929 | DWG. NO. B80704 | REV. A
SCALE: FULL | SHEET 1 OF 1

AERO CONSULTING SERVICES COMPUTER DRAFTING SYSTEM